Distributed by:

JAMECO® ELECTRONICS

www.Jameco.com ✦ 1-800-831-4242

The content and copyrights of the attached material are the property of its owner.

Jameco Part Number 788002

FAIRCHILD SEMICONDUCTOR™

TIP47/48/49/50

High Voltage and Switching Applications

- High Sustaining Voltage : V_{CEO}(sus) = 250 - 400V
- 1A Rated Collector Current

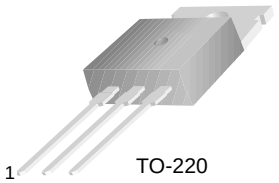

TO-220

1.Base 2.Collector 3.Emitter

NPN Silicon Transistor

Absolute Maximum Ratings T_C=25°C unless otherwise noted

Symbol	Parameter		Value	Units
V_{CBO}	Collector-Base Voltage	: TIP47	350	V
		: TIP48	400	V
		: TIP49	450	V
		: TIP50	500	V
V_{CEO}	Collector-Emitter Voltage	: TIP47	250	V
		: TIP48	300	V
		: TIP49	350	V
		: TIP50	400	V
V_{EBO}	Emitter-Base Voltage		5	V
I_C	Collector Current (DC)		1	A
I_{CP}	Collector Current (Pulse)		2	A
I_B	Base Current		0.6	A
P_C	Collector Dissipation (T_C=25°C)		40	W
P_C	Collector Dissipation (T_a=25°C)		2	W
T_J	Junction Temperature		150	°C
T_{STG}	Storage Temperature		- 65 ~ 150	°C

Electrical Characteristics T_C=25°C unless otherwise noted

Symbol	Parameter	Test Condition	Min.	Max.	Units
V_{CEX}(sus)	Collector-Emitter Sustaining Voltage				
	: TIP47	I_C = 30mA, I_B = 0	250		V
	: TIP48		300		V
	: TIP49		350		V
	: TIP50		400		V
I_{CEO}	Collector Cut-off Current : TIP47	V_{CE} = 150V, I_B = 0		1	mA
	: TIP48	V_{CE} = 200V, I_B = 0		1	mA
	: TIP49	V_{CE} = 250V, I_B = 0		1	mA
	: TIP50	V_{CE} = 300V, I_B = 0		1	mA
I_{CEX}	Collector Cut-off Current : TIP47	V_{CE} = 350V, V_{BE} = 0		1	mA
	: TIP48	V_{CE} = 400V, V_{BE} = 0		1	mA
	: TIP49	V_{CE} = 450V, V_{BE} = 0		1	mA
	: TIP50	V_{CE} = 500V, V_{BE} = 0		1	mA
I_{EBO}	Emitter Cut-off Current	V_{EB} = 5V, I_C = 0		1	mA
h_{FE}	* DC Current Gain	V_{CE} = 10V, I_C = 0.3A	30	150	
		V_{CE} = 10V, I_C = 1A	10		
V_{CE}(sat)	* Collector-Emitter Saturation Voltage	I_C = 1A, I_B = 0.2A		1	V
V_{BE}(sat)	* Base-Emitter Saturation Voltage	V_{CE} = 10V, I_C = 1A		1.5	V
f_T	Current Gain Bandwidth Product	V_{CE} =10V, I_C = 0.2A	10		MHz
t_{ON}	Turn ON Time	V_{CC} = 400V		0.5	µs
t_{STG}	Storage Time	$5I_{B1}$ = $-2.5I_{B2}$ = I_C = 6A		3	µs
t_F	Fall Time	R_L = 66.7Ω		0.3	µs

* Pulse Test: PW≤300µs, duty Cycle≤2% Pulse

©2000 Fairchild Semiconductor International

Typical Characteristics

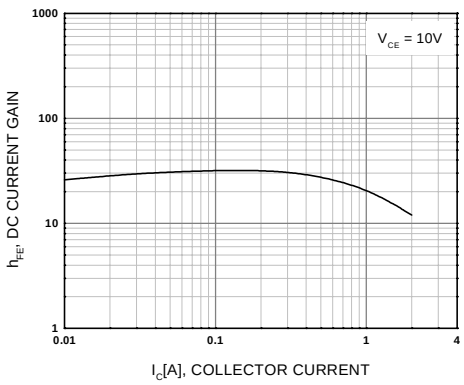

Figure 1. DC current Gain

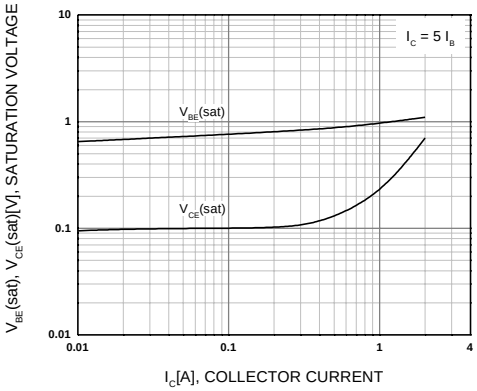

Figure 2. Collector-Emitter Saturation Voltage
Base-Emitter Saturation Voltage

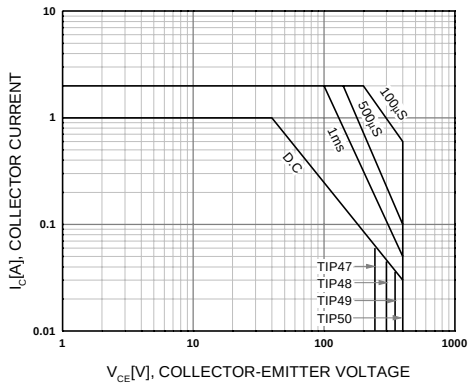

Figure 3. Safe Operating Area

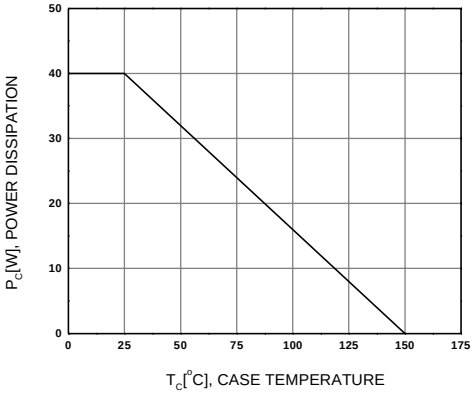

Figure 4. Power Derating

©2000 Fairchild Semiconductor International

Package Demensions

TO-220

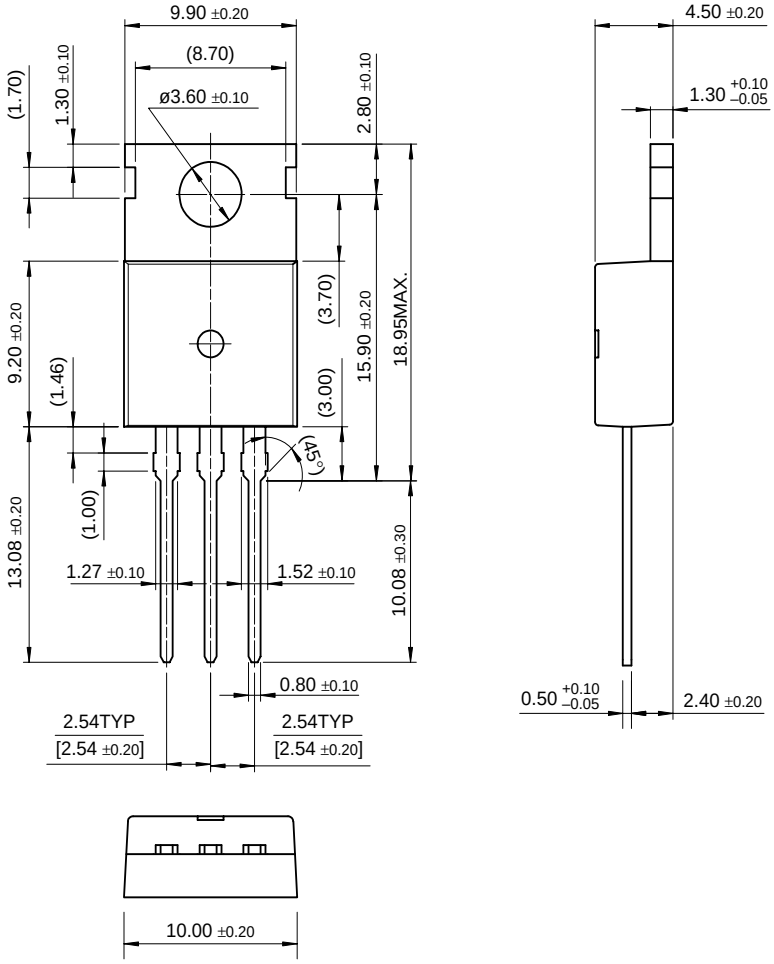

Dimensions in Millimeters

©2000 Fairchild Semiconductor International

TRADEMARKS

The following are registered and unregistered trademarks Fairchild Semiconductor owns or is authorized to use and is not intended to be an exhaustive list of all such trademarks.

ACEx™
Bottomless™
CoolFET™
CROSSVOLT™
E^2CMOS™
FACT™
FACT Quiet Series™
FAST®
FASTr™
GTO™
HiSeC™
ISOPLANAR™
MICROWIRE™
POP™
PowerTrench®
QFET™
QS™
Quiet Series™
SuperSOT™-3
SuperSOT™-6
SuperSOT™-8
SyncFET™
TinyLogic™
UHC™
VCX™

DISCLAIMER

FAIRCHILD SEMICONDUCTOR RESERVES THE RIGHT TO MAKE CHANGES WITHOUT FURTHER NOTICE TO ANY PRODUCTS HEREIN TO IMPROVE RELIABILITY, FUNCTION OR DESIGN. FAIRCHILD DOES NOT ASSUME ANY LIABILITY ARISING OUT OF THE APPLICATION OR USE OF ANY PRODUCT OR CIRCUIT DESCRIBED HEREIN; NEITHER DOES IT CONVEY ANY LICENSE UNDER ITS PATENT RIGHTS, NOR THE RIGHTS OF OTHERS.

LIFE SUPPORT POLICY

FAIRCHILD'S PRODUCTS ARE NOT AUTHORIZED FOR USE AS CRITICAL COMPONENTS IN LIFE SUPPORT DEVICES OR SYSTEMS WITHOUT THE EXPRESS WRITTEN APPROVAL OF FAIRCHILD SEMICONDUCTOR INTERNATIONAL.

As used herein:

1. Life support devices or systems are devices or systems which, (a) are intended for surgical implant into the body, or (b) support or sustain life, or (c) whose failure to perform when properly used in accordance with instructions for use provided in the labeling, can be reasonably expected to result in significant injury to the user.

2. A critical component is any component of a life support device or system whose failure to perform can be reasonably expected to cause the failure of the life support device or system, or to affect its safety or effectiveness.

PRODUCT STATUS DEFINITIONS

Definition of Terms

Datasheet Identification	Product Status	Definition
Advance Information	Formative or In Design	This datasheet contains the design specifications for product development. Specifications may change in any manner without notice.
Preliminary	First Production	This datasheet contains preliminary data, and supplementary data will be published at a later date. Fairchild Semiconductor reserves the right to make changes at any time without notice in order to improve design.
No Identification Needed	Full Production	This datasheet contains final specifications. Fairchild Semiconductor reserves the right to make changes at any time without notice in order to improve design.
Obsolete	Not In Production	This datasheet contains specifications on a product that has been discontinued by Fairchild semiconductor. The datasheet is printed for reference information only.

©2000 Fairchild Semiconductor International